Zacks Small-Cap Research

April 02, 2013
Ian Gilson PhD; MBA; CFA
312-265-9496
igilson@zacks.com

scr.zacks.com
111 North Canal Street, Chicago, IL 60606

OriginOil Inc. (OOIL-OTC)

OOIL: A clear sight to commercial implementation of the Clean-Frac system and the generation of licensing revenue.

Current Recommendation	**Neutral**
Prior Recommendation	Outperform
Date of Last Change	02/03/2013
Current Price (04/01/13)	$0.49
Six- Month Target Price	**$3.00**

OUTLOOK

OriginOil is moving from a proof of concept to a full scale plant for production of oil from algae and the separation of oil and water in oil fields using the company's unique separation processes.

The company's strategy is to be a supplier of technology to algae producers and oil field operators so that the oil separation process is more efficient, less expensive and the cost of oil from algae becomes economically feasible.

The company's goals for the next three years are the commercial introduction of the Clean-Frac system and implementation of company's technology in the separation of oil from algae.

SUMMARY DATA

52-Week High	**$1.75**
52-Week Low	**$0.47**
One-Year Return (%)	**-69.4**
Beta	**0.3**
Average Daily Volume (sh)	**81,066**
Shares Outstanding (mil)	**17.3**
Market Capitalization ($mil)	**$8.6**
Short Interest Ratio (days)	**N/A**
Institutional Ownership (%)	**8**
Insider Ownership (%)	**13.5**
Annual Cash Dividend	**$0.00**
Dividend Yield (%)	**0.00**
5-Yr. Historical Growth Rates	
Sales (%)	**N/A**
Earnings Per Share (%)	**N/A**
Dividend (%)	**$0.0**
P/E using TTM EPS	**N/M**
P/E using 2012 Estimate	**N/M**
P/E using 2013 Estimate	**N/M**

Risk Level	**High**
Type of Stock	**N/A**
Industry	**Alternative Energy**

ZACKS ESTIMATES

Revenue
(in millions of $)

	Q1 (Mar)	Q2 (Jun)	Q3 (Sep)	Q4 (Dec)	Year (Dec)
2010	**$0.0 A**	**$0.0 A**	**$0.0 A**	**$0.0 A**	**$0.0 A**
2011	**$0.1 A**	**$0.0 A**	**$0.0 A**	**$0.0 A**	**$0.2 A**
2012	**$0.5 A**	**$0.0 A**	**$0.0 A**	**$0.6 E**	**$1.2 E**
2013	**$0.6 E**	**$0.9 E**	**$1.4 E**	**$2.0 E**	**$4.9 E**

Earnings per Share
(EPS is operating earnings before non recurring items)

	Q1 (Mar)	Q2 (Jun)	Q3 (Sep)	Q4 (Dec)	Year (Dec)
2010	**-$0.13A**	**-$0.15A**	**-$0.24A**	**-$0.30A**	**-$0.80A**
2011	**-$0.13A**	**-$0.14A**	**-$0.22A**	**-$0.35A**	**-$0.81A**
2012	**-$0.22A**	**-$0.08A**	**-$0.16A**	**-$0.05E**	**-$0.46E**
2013	**-$0.03E**	**-$0.02E**	**$0.01E**	**$0.04E**	**-$0.01E**

Zacks Projected EPS Growth Rate - Next 5 Years % **N/M**

© Copyright 2013, Zacks Investment Research. All Rights Reserved.

RECENT NEWS

After the successful completion of the CLEAN-FRAC field trial in Bakersfield CA OriginOil has demonstrated the equipment in Eagle Ford shale region near San Antonio TX to operators and service companies. Observers commentated on the efficiency of the process and the clarity of the effluent water. Prior to treatment the contaminated water contained anticoagulants to keep solids and small amounts of oil suspended in the water. The CLEAN-FRAC system was able to separate out 98% of the solids and reduce the oil by 99%.

OriginOil is now assisting in the deployment of a 42 gallon/minute integrated clean-up system, which should be on line in 3Q13 in Bakersfield CA.

Based on the studies and tests done so far PearlH_2O has worked up an estimated cost of treating contaminated waste water from oil wells. Using lab scale equipment to measure actual costs of the CLEAN-FRAC equipment and extrapolating the costs of operating PACE equipment in the field OriginOil has reported a cost estimate of $0.025 per gallon treated. This was compared to cost studies using Halliburton's CleanWave process, published in 2011, of $0.04 per gallon treated. The $0.025 per gallon cost did not include any credits for the crude oil recovered.

Based on the removal of 95% to 99% suspended solids, hydrocarbons (oil) and heavy metals (including iron) Halliburton reported the cost as $0.04 per gallon of water treated. This did not include the cost of bacteria removal by Halliburton's Clean-Stream process.

The next step is to build and test a commercial scale system that has been optimized for all processes. It is possible that a PearlH_2O commercial system could treat the effluent to a level that allows the water to be reused at 50% of the cost of current processes.

The initial results by PACE Engineering on the separation of oil and water from fracking flowback liquids was a removal 98% of the organic material in one pass (including crude oil), which is substantially more than that removed by conventional methods.

OriginOil had reported on Feb. 28, 2013 that its CLEAN-FRAC water treatment system has successfully completed a field test on a producing well near Bakersfield CA. The water from the well was contaminated with heavy crude oil and drilling residues. The organics in the water was reduced by 99% and suspended solids was reduced by 98%.This test shows that an operator can increase the oil produced and reuse the water, both of which are economic benefits that would offset the cost of the equipment used to clean the water. The CLEAN-FRAC system does not add any chemicals to the effluent.

Oil field operators are extremely conservative. Bonuses depend on production and any action that may reduce or slow down oil production is unlikely to be accepted. That means that extensive testing, on someone else's well, is not unusual.

The company's prolific research group has resulted in a large number of potential market opportunities for OriginOil's patented separation systems. Management has decided to focus on the oil/water separation market using the "CLEAN-FRAC" system based on its Solids out of Solutions technology. In our opinion this is a very positive move by the company. It has the potential of generating very high profit margins without diluting its major market efforts.

The group will be headed by Alex Leshnick, the current Director of Operations, who is a registered patent agent and has many years of managing a portfolio of over 150 technologies and several hundred patents.

Origin oil has announced that its Solids out of Solution (SOS) technology is capable of significantly reducing the concentration of ammonia in water, achieving a 99% in ammonia concentration in a test sample containing 30 ppm of ammonia. Ammonia is produced in the putrefaction of animal (or Piscean , the fishy smell) matter. It is poisonous to fish and has to be removed in aquaculture. The company has agreed to develop a cooperative partnership with WeFeedUs, a Pennsylvania based aquaculture company, to test and validate the control of ammonia and bacteria in aquaculture. This is a $100 billion plus industry worldwide and algae is currently used as a fish food.

This is another example of Origin Oil's strategy of providing unique applications of its technology across many industries. Unfortunately there is a lag between the inventions, their applications and the generation of royalty revenue to the company. This lag has had an impact of the stock price and this may continue. As a result we have decided to reduce our recommendation from Outperform to Neutral and we will reassess this as the applications move closer to revenue generation.

In September 2012 OriginOil had filed a complaint in the US District Court, Central District of California against MBD Energy Limited. OriginOil's algae harvesting technology was first used in a pilot plant by MBD Energy of Australia and Melbourne, Australia based Frontline Engineering is the Certified Support Partner. OriginOil has filed 29 patent applications in various countries and had been granted an Australian patent. Subsequent to the pilot plant work in Australia MBD had filed a patent application that included intellectual property owned by OriginOil. In October the senior management of MBD visited Los Angeles to discuss the problem and agreed to settle the litigation by withdrawing the patent application, assurances of future non-infringement and continuation of the commercial relationship between the two companies. In return OriginOil has dropped the complaint.

On December 19, 2012 OriginOil announced that its algae harvesting process can reduce bacterial counts by as much as 99%. This extends the lifetime of algae concentrations from hours to days. A study by an independent University research group using algae from open algae ponds and closed bioreactors compared results from centrifugal processes and from OriginOil's Algae Appliance. The bacteria attack the oils in the algae, causing it to smell (like rotten fish) and

reducing its value. OriginOil's algae appliance can be used on a small scale algae bioreactor or can be scaled up for large algae farms.

The showcase building for using algae to clean wastewater in La Defense near Paris France was opened in early December, 2012. Ennesys, a partner with OriginOil in the development of the algae system, had developed the system using an algae appliance shipped to them in July 2012.

OriginOil announced on Nov. 22, 2012 the signing of an non-exclusive agreement with LH Opportunities Group Ltd. of Alberta, Canada to work with Ensteel Industries to promote the use of OriginOil's Clean-Frac process in Canada. The end markets will include the oil sands market, industrial waste water treatment and water recycling. LH and Ensteel will design and build units and OriginOil will receive royalty payments based on a percentage of system sales revenue. LH has a long history in the oil sands business, being an early investor in Athabasca Oil Corp. Ensteel has over 40 years experience in building and completing projects in the Canadian oil and gas sector. Both companies stated that they are well equipped to produce units in the very near term. Reclamation of mining sites in Canada have to restore the land back to its pre-mining condition, which means all fluids and process chemicals must be treated to remove residual oil.

The company reported third quarter results on Nov 20, 2012. Expenses were higher than expected with a significant increase in G&A due to non cash compensation charges. We expect some revenue in the fourth quarter but looses are likely to continue into next year.

OriginOil has granted a non-exclusive license agreement with Pearl H_2O for the integration of OriginOil's CLEAN_FRAC water treatment process into Pearl's frac water clean-up system. This system has been tested to safe water standards. Pearl H_2O is a newly funded company with experience in agricultural drain-water treatment. Funding is from shareholders of PACE, which had validated the early testing of the CLEAN_FRAC process. This is the first potential commercial application of the process and OriginOil expects to be paid, on a royalty basis from the revenue paid to Pearl, starting in early 2013.

OriginOil has been granted its first Australian patent, number 2010239380, for a term of 20 years. Patents are valuable assets, especially within the company's strategy of licensing its technology. The algae harvesting technology was first used in a pilot plant by MBD Energy of Australia and Melbourne, Australia based Frontline Engineering is the Certified Support Partner. OriginOil has filed 29 patent applications in various countries.

The company announced on September 12, 2012 that it intends to license its proprietary Clean-Frac process for cleaning oil/gas/solids/water mixtures generated in the fracking process used to break oil shale structures. A non-exclusive license will allow a licensee to integrate Origin Oil's technology into its own brand clean-up systems and pay OriginOil a royalty based on a share of the revenues. The company has a prospective licensee that has done a significant amount of design work integrating the clean-up systems and has received very positive feedback from potential customers. This type of business may be the largest generator of revenue to OriginOil since the potential market for such systems could approach a trillion dollars per year.

The US DOE, Idaho National Labs, has ordered two test scale energy appliance units. One is a Model 4 algae dewatering system that will treat four liters of liquids per minute that will be tested for its ability to produce formulated feedstocks from biomass. This unit is similar to the one currently being installed in the La Defense complex near Paris, France. The second unit, a Solids Out of Solution (SOS) Model 2K, can process first-stage cleaning of up to 2,000 gallons of frac flowback water a day. These units will incorporated into process demonstration units that can be used by industry and researchers to validate various applications.

OriginOil has formed a dedicated business unit to market its technology for frack water clean-up and petroleum recovery. Dr. R. Gerald Bailey, a former president of Exxon's Arabian operations and Chairman of Bailey Petroleum, will act as an industry advisor and the General Manager will be Bill Charneski who has extensive experience in chemical engineering and chemical sales with Dow Chemicals.

It is a strong testament to the potential of the new technology that Dr. Bailey and Bill Charneski have agreed to advise and manage this unit, given that it is so early in the development of the application of the technology.

OriginOil has shipped the first production unit of its Model 4 Algae Appliance harvester to its JV Ennesys, Paris, France, to be used for water management in the La Defense complex. The unit will be installed at a site designed by Ennesys to test the suitability of algae production in helping large commercial buildings achieve a positive energy balance. The model 4 sells for about $35,000 as a test unit. Revenue recognition by OriginOil is when the unit is delivered to the site.

Over the past six months the company has raised money in a number of transactions. This has increased the number of shares and warrants outstanding. Our estimates assume the warrants will not be included in the full year share count until 2014.

The company has added a third independent director to its Board. The importance of knowledgeable directors on the boards of small companies should not be under estimated. They provide expertise and contacts that help companies grow. They can help management avoid the pitfalls that occur in growing a business.

OriginOil has announced the engagement of Clean Water Technology Inc. (CWT) (a private company in Los Angeles CA.) to manufacture the oil/water separation units and integrate them into existing equipment in the oil field. OriginOil worked with CWT when the Australian algae harvesting pilot program was scaled up. The units will be used for field validation in Texas later this year.

CWT has a 20 year history of waste water treatment including dissolved air flotation systems and waste water secondary and tertiary treatment using modular systems. Pace Engineering and

OriginOil will work together to design and make first units to process up to 60,000 gallons a day. This is a small scale unit as the amount of flowback water produced at a drilling site is well in excess of this amount.

The separation of oil and water from fracking flowback liquids has been validated by PACE Engineering, a civil engineering firm in Fountain Valley, California. The Algae Appliance was able to remove 98% of the organic material in one pass (including crude oil), which is substantially more than the 78% removed by conventional methods. After a third treatment the chemical oxygen demand was reduced and the water clarified.

Water used in drilling operations will flow back to the surface. The liquids contain oil, oil in water emulsions and organics dissolved in the water as well as suspended solids. This contaminated wastewater must be treated before it can be reused or disposed of. Currently it takes chemical treatment, and time, to break up the mixture. Industry sources estimate that the cost of treatment can be as much as $0.25 a gallon. Current US oil exploration creates 650 billion gallons to 850 billion gallons of waste water and estimates of world-wide production is over 2,200 billion gallons. The potential treatment market exceeds $500 billion.

Using the Appliance Origin Oil has been able to separate the oil and solids from the water. The oil has an economic value offsets the cost of treatment and the water can be reused in the hydraulic fracturing process. The process is quicker and should be less expensive than the current separation methods.

On May 03, 2012 Origin Oil announced an agreement with Algasol Renewables to develop an integrated algae growth and harvesting system. Algasol has a patented photo bioreactor system that floats on water, either on the sea or on salt water ponds on land. The company is working with NASA and the Lawrence Berkley National Laboratory. Algasol is also working with the Arizona State University.

The company has announced the availability of a new down-sized Algae Appliance, the Model 4, which has a rated capacity of 4 liters (1.2 US gallons) per minute. This model, priced at $50,000, can operate in a continuous or batch mode. This is an ideal size, and price, for use in an experimental or evaluation situation, especially where there are space constraints.

The first unit will be sent to OriginOil's French joint venture partner Ennesys to be used in the La Defense project discussed below.

OriginOil has filed for patent protection of the new technology which uses a single vessel for dewatering, cell rupture and the final concentration stage.

OriginOil has received a firm order for an Algae Appliance and associated equipment (the appliance is outlined later in the report) from its French joint venture Ennesys. The demonstration

unit will be tested in La Defense, NW of Paris, France as a proof of concept that algae production in a large building complex will achieve a positive energy balance. The algae will absorb a large amount of CO_2 and provide clean energy to the complex. France has an ambitious government mandate that all new buildings must generate more clean energy than they consume and must purify and recycle water naturally.

Since May 2011, Ennesys has been involved in discussions regarding the potential integration of wastewater algae production in two very large building projects in the Greater Paris region as well as in other French cities.

This order could signal a new paradigm in the generation of clean energy through the use of algae.

Commercial agreement:

Algae producer Aquaviridis and Origin Oil have signed a commercial agreement to co-develop a algae production system in Mexico, south of Mexicali, Mexico, about 20 miles south of the US border, in Ejido Nuevo Leon, Baja California. In this region there are a number of geothermal water sources as well as normal aquifers. Carbon dioxide is also available as well as lots of hot sunny days.

We would assume that license fees would accrue to Origin Oil during the scale up period.

Establishing standards:

The company has announced a research agreement with the DoE's Idaho National Laboratory (INL) to collaborate towards the establishment of industry standards for alga biomass. Origin Oil will provide its technology and knowhow for Single Step Extraction, pretreatment and stimulation of oil production from algae. The aim is to obtain consistent extraction of oil from algae, establish standards and make algal fuels a viable alternative to petroleum products.

Origin Oil will benefit by obtaining scientific and engineering knowledge about downstream processes from INL.

INL has stated that the agreement will help Origin Oil find solutions to converting algae into energy feedstocks more efficiently.

Joint Venture:

Origin Oil has formed a joint venture (JV) called Future Energy Systems Unlimited Inc. (FES) with a group of investors. The JV has a subsidiary, Alternate Energy Systems Pty Ltd (AES) in Australia. The JV will do feasibility studies on the development of biorefineries, aided by funding from the Energime Group of Companies (currently projected at $4.5 million). Energime will play a key role in designing, building, operating and owning these refineries that would be financed by third parties. Origin Oil will receive a royalty payment through FES as these plants are operated.

The Algae Appliance:

On November 16, 2011 at the 4th Algae World Asia Conference in Beijing, China OriginOil introduced the "Algae Appliance", a commercial entry level algae harvesting system This system offers algae producers a low cost, low energy chemical free method that has the potential of removing 90% of the initial water volume used in growing the algae. The Algae Appliance will be available after field testing is complete in the first half of next year.

The Algae Appliance embodies the company's integrated Supervisory Control and Data Acquisition (SCADA) control system and would be an excellent test bed for OriginOil's full sized system.

Details from the conference and from the company's web site are shown below.

Algae Appliance

Designed to facilitate the testing of algae harvesting process scale-up from laboratory to pilot scale, the Algae Appliance™ provides a low energy, chemical-free, continuous flow ‘wet harvest’ system to efficiently dewater, compromise cell walls, and concentrate dilute microalgae in suspension.

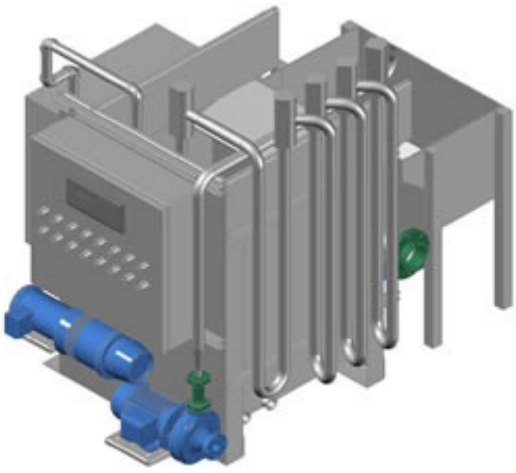

Control Panel View

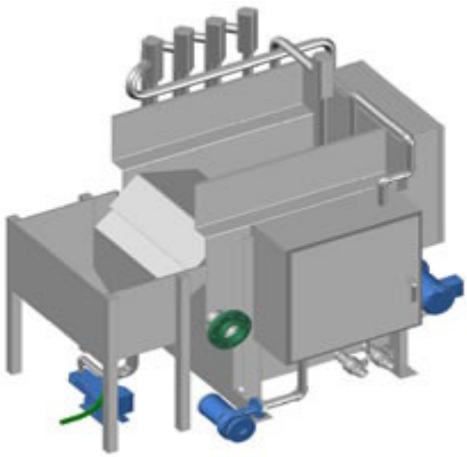

View from Discharge Side

The Algae Appliance flow rate is variable from 2 to 20 liters per minute (.5 to 5 GPM), with the potential to remove up to 90% of the initial water volume at the harvesting stage. The system is extremely well suited for testing aimed at the development of commercial scale processes, in that it provides these features and benefits:

Features	Advantage	Benefit
Feed algae water directly from growth system	No pre-concentrating or dewatering required	Savings in CAPEX and OPEX
Dewatering uses electromagnetic pulses and biomass concentrator	No added chemicals in process	Eliminates conflicts in downstream refining, processing or biomass usage
Low energy electromagnetic pulses to compromise algae cells	Total energy less than one kWh per cubic meter	Maximizes the release of lipids with low energy and without chemicals
Integrated biomass concentrator	Removes up to 90% of the water from the algae	Savings in OPEX by removing most of the water early in the process
High continuous throughput	Scalable and efficient	Reduced CAPEX and OPEX
Skid mounted modules	Easy Installation	Savings in installation cost

Process Overview

The Algae Appliance is typically located on premises at the algae growth facility. When ready for harvesting, the dilute microalgae culture is fed directly from the growth systems into the Algae Appliance without any prior pretreatment or concentration. Each system is equipped with its own integrated Supervisory Control and Data Acquisition (SCADA) control system, along with sensors which monitor various characteristics of the input and output streams. The SCADA unit's control algorithms manage the operational settings for flocculation (algae aggregation) and for compromising of algae cell walls (cell lysing). As the dilute suspension passes through the Algae Appliance it is subjected to tuned electromagnetic pulses. The system operation consists of three phases:

- First phase: low-energy, chemical-free flocculation.
- Second phase: concentration to remove up to 90% of the water.
- Third phase (optional): cell wall compromise ("cracking") for downstream availability.

  Optional devices are available to achieve higher solids concentration downstream from the Algae Appliance.

Product Specifications

- Flow Rates: Variable based upon operator controlled settings:
  - Minimum: 2 LPM (0.5 GPM) – processing 3,000 liters per day in continuous harvest.

- Maximum: 20 LPM (5 GPM) – processing 30,000 liters per day in continuous harvest.* *(Sufficient for a 150,000 liter growth facility at 20% daily harvest)

- Microalgae concentration: Wide flexibility from less than 125mg to 1g/liter dry weight and beyond.
- Dimensions: Length 214cm, width 152cm, height 214cm (L 7'-0", W 5'-0", H 7'-0").
- Weight: 1,140 kg (2,500 pounds).
- Electrical requirements: 120/240 volts, 50/60 hertz.
- Power consumption: Approximately 0.002 kWh at 10 LPM.

Additional Product Features

- Sensor telemetry with touch screen software for real-time control.
- Remote support by OriginOil technicians (requires support contract).
- Tunable to a wide range of fresh and saltwater microalgae species.
- Mounted on single skid for ease of transport and installation.
- Applicable to all growth platforms.

Harvest pretreatment speeds up growth of algae:

OriginOil has discovered that the growth of algae can be stimulated by treating the culture with low power electromagnetic fields using a solar cell to generate the power. More growth means more oil. The company has postulated that the electromagnetic fields increases the uptake of CO_2 and other nutrients. The process needs to be validated at a full scale plant.

OriginOil is not an algae producer:

Some comments suggest that OriginOil is an algae producer. This in not correct. The company is a capital equipment supplier to the industry. It does not produce, store or sell algae or oil from algae.

OriginOil has announced that the first SSE Production System has been shipped.

The first Single Step Extraction production system (announced in January 2011) has passed its acceptance tests and is being shipped to Australia by sea and should be installed and working at MBD Energy's facility.

The value of the purchase order was $150,00, of which $75,000 was received and booked as revenue and $37,500 is due now since the unit has shipped and the final payment of $37,500 will be due on installation. The transaction was recognized in 2011.

The system should produce about 22 pounds of biomass, which is close to 10 gallons of algae oil, each day from close to 161,000 gallons of treated water. This unit will be used to prove out large scale production facilities.

OriginOil has developed an improved process for recovering oil from mixtures.

The usual method for extracting oils from oil/water mixtures is to use an immiscible solvent such as hexane which is oil soluble and non-polar. However, some oil remains with the water especially if the oil has organic acid or hydroxyl groups. OriginOil has identified a naturally occurring product that has both polar and non-polar characteristics. In the case of bio-oil from algae it also enhances the extraction of oil from the biomass by as much as 15%. The use of this algal metabolite could be incorporated into OriginOil's Single Step Extraction (ESS) system without any problems.

Crude oil is often found together with water. Also steam flooding and using water to increase the pressure in an oil field are common techniques that involve the recovery billions of gallons of oil. The use of alginates in enhanced oil recovery is well known so another algae product should be accepted without too many problems.

The separation of the oil from the water could be a major source of licensing revenue for OriginOil.

Algae World Australia conference:

Delegates to the recent Algae World Australia conference toured the James Cook University technology test site operated by MBD Energy and, after the conference ended, visited the demonstration site for the flue gas capture and large scale use of the OriginOil's oil extraction technology. The conference was well attended by the press including a major Chinese language magazine. Two videos were released by OriginOil at the conference.

Order increase from MBD Energy, Ltd.

On August 12, 2011 OriginOil announced an increase in the order from MBD Energy Ltd, first announced on May 23, 2011. The total value of the order is $850,000. MBD paid OriginOil $297,500 on August 5, 2011 pursuant to a purchase order placed on July 29, 2011.

The new system is expected to process the daily harvest of 300 gallons per minute of algae culture. The algae will grow using the flue gas from the Tarong, Queensland, power station. This order follows the placement of an order for a mobile system in the 1st quarter of 2011. The total order was for $150,000, of which MVD paid a $75,000 deposit. This follows the test system order reported on June 1, 2010.

These two orders reflect the transition of OriginOil from the proof of concept through the demonstration of the feasibility of the process. The next step is the scale-up of the process in a pilot plant and then to a full scale production plant.

Developed real time control network to control continuous algae harvesting:

OriginOil announced on August 4, 2011 the development of a real time control system to adjust algae harvest settings for the Single Step Extraction process, the downstream concentration and separation processes. The network will be installed at the MBD plant test site.

OriginOil has applied for a patent on the system, which will be the company's 16th patent application.

OriginOil Selects PACE for roll-out of Single Step Extraction Systems:

On July 27, 2011 OriginOil announced the selection of Pacific Advanced Civil Engineering (PACE) of Fountain Valley CA, to fast-track the engineering of the Single Step Extraction system at Tarong, Queensland and to engineer commercial modular systems at other sites in response to customer demand.

KEY POINTS

- The separation of oil/water/solids mixtures is possible in a highly effective and low cost method using OriginOil's technology.
- The cost of extracting oil from algae can be dramatically reduced using OriginOil's technology.
- Algae produce bio fuels that are viable replacements for petroleum based fuels
- Growing algae does not require the use of arable land or consume scarce foodstuffs such as corn.
- The use of Algae to produce oil consumes carbon dioxide and can clean effluent streams.
- Burning oil from algae produces no sulphur dioxide or heavy metals.
- The oil produced is compatible with the current petroleum infrastructure.

OVERVIEW

Over 1.25 trillion gallons of petroleum, worth nearly $3 trillion, was consumed world-wide in 2010. The United States is a net importer of crude oil, much of it from countries that have unstable governments that are not friendly to the US. Many countries are looking for alternative fuels and ways for making fuels that are not based on crude oil. As an example the EU has invested in biodiesel production with a target of 10% of all road transportation fuel use based on bio-diesel by 2020 (EU policy as part of Climate Change and Energy Package). In 2009 over 9 million tonnes (2204.6 pounds per metric tonne) of biodiesel was produced, which was less than half of biodiesel production capacity. Germany, France and Spain were the leaders in biofuel consumption. Much of the biofuel was produced from seed oils from non edible plants.

There are other ways of producing a burnable oil. One is the pyrolysis of cellulosic biomass, usually waste wood and bark, corn fiber, bagasse (sugar cane after most of the sugar has been removed) and wastepaper. The problem is that there is a limited supply of available waste and much of it can be burnt directly at the point of production.

What is needed is a product that produces oil, grows quickly under adverse conditions and can be easily harvested. Algae fits these conditions. In fact using algae to produce a biofuel (replacing jet fuel, diesel and gasoline) may be the best, if not the only, method of replacing a significant amount of the petroleum used in the automobile and transportation industry. The US Dept. of Energy has estimated that all of the petroleum fuel used in the US could be replaced by algae based oils using 0.42% of the US landmass, which is less than 15% of the area used for growing corn in 2000.

Industry sources estimate that the world biofuels market based on algae will grow at a 12% CAGR from 2010 to 2017 and will generate $105 billion in annual revenue by 2018.

There are over 60 different strains of micro algae, including the cyanobacteria (blue-green) algae. Many types of algae can grow anywhere where light and oxygen is available. Such as swimming pools, flower vases, ponds, in salt water and brackish water. There is the notorious Crimson Tide and several that grow only in the cold Antarctica waters. Only about 10% of known algae produce oil. These oils are Omega-3 lipids, long chain unsaturated fatty acids. Some strains contain 10% oils by dry weight and others are reputed to contain 80% oil.

They all grow fast, as much 30 times faster as the next best crop. They will grow in the smokestack gas of a power station, the effluent from a sewage treatment plant, on arid land, in deserts, saline conditions, in fact almost anywhere.

It's simple: **Micro**-**algae** can produce 150-200 times more bio-lipid oil than any other feedstock or terrestrial plant (or seed) on a per-acre per-year basis.

THE COMPANY

OriginOil is currently developing technologies to help companies produce oils from algae that can replace petroleum products in various applications such as diesel, gasoline and jet fuel; plastics and solvents; cosmetics and drugs. Algae, unlike other bio-fuel feedstock such as corn and sugarcane, do not destroy vital farmlands and rainforests, disrupt global food supplies or create new environmental problems.

The Company has developed a number of processes in controlling algae growth and oil extraction, with an emphasis on dewatering and oil extraction at high speeds. On March 28, 2011, the Company stated its intention to provide other technologies and integration services to its early stage marquee customers.

The Company's business model is based on licensing this technology to distributors, manufacturers, and engineering service firms, similar to the business model of Universal Oil Products (formed in 1914 and now known as UOP/Honeywell. UOP developed the cracking process that is the foundation of the petroleum refining industry). OriginOil is not in the business of producing and marketing oil based on algae, nor of developing sales distribution networks or engaging in volume manufacturing. This has the advantage of not needing a lot of capital for infrastructure and equipment. The company can develop licensing annuities and partnerships rather than compete with algae producers.

INDUSTRY BACKGROUND

Algae can be grown in open ponds, transparent plastic or glass tubes or closed bio-reactors. The advantages and disadvantages of each method are well known.

In all cases the algae is suspended in water saturated with CO_2, fed with nitrogen, phosphorous and phosphate as well as the essential trace elements needed for growth but in all cases the product is a algae/water mixture that may contain a 1,000 to 1 ratio of water to algae. And water is hard to remove.

So, OriginOil does not separate the algae from the water. The acidity of the water algae mix is adjusted with CO_2 and other inputs, and is treated with an electromagnetic field as it passes into an extraction tank. The electromagnetic field causes the algae to flocculate (bunch up), breaks up the algae cell walls and releases the oil, which rises to the top of a gravity clarifier (which looks like a triangular coffee filter), the biomass drops to the bottom as it is no longer buoyed by the oil and the water remains in the middle. The oil is separated at the top, the water is recycled back to the bioreactor and the biomass removed from the bottom of the clarifier. Earlier this year, the company worked with its pilot customer MBD Energy to implement a Dissolved Air Flotation (DAF) system from process partner World Water Works, to accomplish the same concentration step. The biomass can be used as a soil modifier, an ethanol feedstock used instead of corn, a plant and fish food or a source of proteins.

INDUSTRY OUTLOOK

There are many companies in the algae extraction business, most are small, some are well established in non-fuel applications of algae and are moving towards lipid extraction and some are major technology companies like UOP/Honeywell and United Technologies. As a provider of some unique technology OriginOil could work with nearly all of them.

INDUSTRY POSITION

Currently, there are approximately 50 companies that are attempting to culture micro-algae for bio-lipids. Only a few of are marginally successful.

OriginOil competes with classic chemical, membrane and centrifuge-based harvesting systems such as provided by SRS Energy and others. OriginOil estimates that its system have much lower capital and operating costs than any of these approaches. The company estimates that the operating expenses for its system is $0.006/kg. with a capital expenditure of $0.006/kg, to achieve what the company defines as Algae Crude, a pump able oily biomass at 10% solids. OriginOil has identified other companies, such as Open Algae, that make claims for next-generation harvesting, but none are in market at this time so their claims cannot be verified.

RISKS

- Customers may be slow to adopt new technology from a company with limited operating history.
- The company will need to expand and it will need to hire people, This may require addition capital from external financing.

INSIDER TRADING AND OWNERSHIP

Insiders own 13.5% of the current shares outstanding.
Trading data is not available.

VALUATION

OriginOil is an early stage development company in a number of exciting industries. The company is developing unique uses of its technology and is in the process of building its client base but this will take time. It is difficult to value an early stage technology company but our assumptions are that the company

will build relationships and a backlog of business over the three year and beyond and this will be recognized by investors. Our price target is $3.00 a share.

COMPARISON TABLE	Ticker	Price	Mkt	ROE	P/E	P/E	P/B	P/S	EV/Rev.	EV/EBITDA	PEG	Inst.
		4/2/13	Cap	(%)	L4Q	N4Q	LQ	L4Q	L4Q	L4Q		Ownership
			(in million)									
OriginOil, Inc.	**OOIL**	**$0.49**	**$8.5**	**NM**	**NM**	**NM**	**36.55**	**13.72**	**13.6**	**0.37**	**NA**	**N/A**
BioFuel Energy Corp.	BIOF	$5.04	$27	NM	NM	NM	0.41	0.05	0.36	42.90	N/M	50.4%
Cereplast Inc.	CERP	$0.02	$3	NM	NA	NM	0.18	3.97	25.37	N/M	NA	3.0%
Codexis Inc.	CDXS	$2.26	$85	NM	NM	NM	1.13	1.00	0.50	N/M	NA	35.4%
Cyanotech Inc.	CYAN	$4.42	$24	17.42	9.06	N/A	1.39	0.91	0.83	5.35	N/A	24.2%
Ecosphere Technologies Inc.	ESPH	$0.44	$67	22.26	N/A	N/A	N/A	2.20	2.20	19.90	N/A	1.3%
FutureFuel Corp.	FF	$12.07	$523	12.51	14.56	12.19	1.93	1.49	1.08	6.72	N/A	37.7%
Renewable Energy Group Inc.	REGI	$8.08	$247	6.10	30.26	8.51	0.74	0.24	0.20	8.59	0.38	23.1%
Solazyme	SZYM	$7.38	$456	N/A	N/A	45.95	2.51	10.54	7.88	N/A	N/A	26.6%
(Source: Yahoo Finance & Zacks Small-Cap Research)												
Mean				14.57	17.96	22.22	5.61	3.79	5.78	13.97	0.38	
Median				14.97	14.56	12.19	1.26	1.49	1.08	7.66	0.38	

PROJECTED INCOME STATEMENT & BALANCE SHEET

OriginOil																	
Consolidated Statements of Operations																	
(Dollars in millions except per share data)																	
Fiscal Year Dec 31.	**2010A**	**1Q11**	**2Q11**	**3Q11**	**4Q11**	**2011A**	**1Q12**	**2Q12**	**3Q12**	**4Q12**	**2012 E**	**1Q13**	**2Q13**	**3Q13**	**4Q13**	**2013 E**	**2014 E**
							Act.	Act.			Est.					Est.	Est.
Net sales	**$0.05**	**$0.10**	**$0.05**	**$0.00**	**$0.03**	**$0.18**	**$0.54**	**$0.02**	**$0.03**	**$0.60**	**$1.18**	**$0.60**	**$0.90**	**$1.40**	**$2.00**	**$4.90**	**$14.00**
% Change												11.52	5900.00	4460.26	233.33	313.96	185.71
Cost Goods	0.00	0.00	0.00	0.00	0.06	0.00	0.39	0.02	0.01	0.50	0.92	0.06	0.09	0.14	0.20	0.49	1.40
G & A	3.81	0.72	0.77	1.14	1.58	4.21	1.11	1.50	1.31	0.80	4.71	0.90	0.90	0.90	0.90	3.60	4.20
In process R&D	0.00	0.00	0.00	0.00	0.00	0.00	0.00	0.00	0.00	0.00	0.00	0.00	0.00	0.00	0.00	0.00	0.00
R&D	0.66	0.19	0.20	0.33	0.42	1.15	0.25	0.30	0.15	0.20	0.90	0.21	0.22	0.23	0.24	0.90	0.96
Depr. & Amort.	0.05	0.00	0.00	0.00	0.00	0.01	0.01	0.01	0.00	0.03	0.05	0.03	0.03	0.03	0.03	0.12	0.00
Op Income GAAP	(4.48)	(0.81)	(0.93)	(1.48)	(2.03)	(5.25)	(1.22)	(1.81)	(1.45)	(0.93)	(5.41)	(0.60)	(0.34)	0.10	0.63	(0.21)	7.44
Interest Expenses	0.00	0.00	0.00	0.00	0.00	0.00	0.00	0.09	0.50	0.00	0.59	0.00	0.00	0.00	0.00	0.00	0.20
Interest Income	0.00	0.00	0.00	0.00	0.00	0.00	0.00	0.00	0.00	0.00	0.00	0.00	0.00	0.00	0.00	0.00	0.00
Non Op Income	0.00	(0.00)	0.00	0.01	(0.40)	(0.40)	0.00	0.00	0.03	0.00	0.03	0.00	0.00	0.00	0.00	0.00	0.00
Other	(0.00)	0.00	0.00	0.00	0.00	0.00	(0.57)	(1.37)	(0.00)	0.00	(1.94)	0.00	0.00	0.00	0.00	0.00	0.00
Calc.Pretax	(4.48)	(0.81)	(0.93)	(1.47)	(2.44)	(5.65)	(1.79)	(3.27)	(1.92)	(0.93)	(7.91)	(0.60)	(0.34)	0.10	0.63	(0.21)	7.24
Taxes	0.00	0.00	0.00	0.00	0.00	0.00	0.00	0.00	0.00	0.00	(1.27)	0.00	0.00	0.00	0.00	(0.03)	1.16
Tax Rate	(0.02)	(0.10)	0.00	0.00	0.00	0.00	0.00	0.00	0.00	0.00	16.00	0.00	0.00	0.00	0.00	16.00	16.00
Other Income	0.00	0.00	0.00	0.00	0.00	0.00	0.00	0.00	0.00	0.00	0.00	0.00	0.00	0.00	0.00	0.00	0.00
Pro-forma adj.	0.00	0.00	0.00	0.00	0.00	0.00	0.00	2.48	0.00	0.00	2.48	0.00	0.00	0.00	0.00	0.00	0.00
Net Income	(4.48)	(0.81)	(0.93)	(1.47)	(2.44)	(5.65)	(1.79)	(3.27)	(1.92)	(0.93)	(7.91)	(0.60)	(0.34)	0.10	0.63	(0.21)	7.24
Costs and expenses are on a pro-forma basis																	
Net For Common	(4.48)	(0.81)	(0.93)	(1.47)	(2.44)	(5.65)	(1.79)	(3.27)	(1.92)	(0.93)	(7.91)	(0.60)	(0.34)	0.10	0.63	(0.21)	7.24
Shares Used, millions	5.57	6.37	6.79	6.80	6.90	7.02	8.19	9.98	12.21	17.27	11.91	17.50	17.50	17.50	17.50	17.50	17.50
Earnings Per Share																	
EPS	**($0.80)**	**($0.13)**	**($0.14)**	**($0.22)**	**($0.35)**	**($0.81)**	**($0.22)**	**($0.33)**	**($0.16)**	**($0.05)**	**($0.66)**	**($0.03)**	**($0.02)**	**$0.01**	**$0.04**	**($0.01)**	**$0.41**
Pro Forma EPS	**($0.80)**	**($0.13)**	**($0.14)**	**($0.22)**	**($0.35)**	**($0.81)**	**($0.22)**	**($0.08)**	**($0.16)**	**($0.05)**	**($0.46)**	**($0.03)**	**($0.02)**	**$0.01**	**$0.04**	**($0.01)**	**$0.41**

© Copyright 2013, Zacks Investment Research. All Rights Reserved.

OriginOil						
Consolidated Balance Sheet (in $ millions)						
Fiscal Year Dec 31.						
	2009 A	2010 A	2011 A		1Q12	2Q12
ASSETS						
Cash & Equiv.	0.36	0.24	0.20		0.23	0.08
A/R	0.00	0.00	0.00		0.00	0.02
Inventories	0.00	0.00	0.00		0.00	0.00
Other	0.03	0.10	0.57		0.62	0.63
Total current assets	0.39	0.34	0.76		0.85	0.73
Gross Plant	0.15	0.15	0.06		0.11	0.05
Acc. Deprn	0.07	0.12	0.00		0.00	0.00
Investments	0.00	0.00	0.00		0.00	0.00
Intangibles	0.05	0.09	0.00		0.00	0.26
Other	0.01	0.01	0.21		0.22	0.03
All Assets	0.53	0.47	1.03		1.18	1.07
LIABILITIES AND NET WORTH						
Debt Due 1 Yr	0.00	0.00	0.01		0.59	0.00
Notes Payable	0.00	0.00	0.00		0.59	0.57
A/P	0.00	0.06	0.34		0.00	0.28
Taxes	0.00	0.00	0.00		0.00	0.00
Other	0.00	0.06	1.48		1.22	0.38
Total current liabilities	0.00	0.11	1.83		2.41	1.24
Conv. Debt	0.00	0.00	0.00		0.00	0.00
L.T.Debt	0.00	0.00	0.00		0.00	0.00
Other LT	0.00	0.00	0.00		0.00	0.00
Def. Taxes & ITC	0.00	0.00	0.00		0.00	0.00
Other	0.05	0.00	0.00		0.00	0.00
All Liabilities	0.06	0.11	1.83		2.41	1.24
Pref.Stock	0.00	0.00	0.00		0.00	0.00
Common Stock	0.02	0.02	0.00		0.00	0.00
Surplus	7.16	11.51	16.20		17.56	21.84
Retained Earnings	-6.87	-11.35	-17.00		-18.79	-22.06
Other	0.16	0.19	0.00		0.00	0.05
Treasury Stock	0.00	0.00	0.00		0.00	0.00
Net Worth	0.47	0.36	-0.80		-1.23	-0.17
Total liabilities & stockholders' equity	0.53	0.47	1.03		1.18	1.07

© Copyright 2013, Zacks Investment Research. All Rights Reserved.

OriginOil				
Condensed Consolidated Statements of Cash Flows				
Fiscal Year Dec 31.				**6 Months**
	2009A	**2010A**	**2011A**	**2012**
Cash flow from operations:				
Net (Loss) Income	-4.92	-4.48	-5.65	-5.06
Depreciation & amortization	0.06	0.05	0.01	0.01
Amortization of goodwill or Debt discount				1
Stock issued for services			0.26	0.91
Stock based compensation	2.21	1.28	0.95	0.55
Impairment of machinery				
In-process R&D				
Other	-0.02	0.42	0.70	0.92
Net cash provided by (used in) operating activites	**($2.67)**	**($2.73)**	**($3.73)**	**($1.67)**
Cash flow from investments:				
Purchase of PP&E				
Proceeds from disposal of PP&E				
Other	(0.03)	(0.04)	(0.15)	(0.08)
Net cash provided by (used in) investing activities	**($0.03)**	**($0.04)**	**($0.15)**	**($0.08)**
Cash flow from financing activities:				
Proceeds from issuance of common stock	2.32	2.45	3.84	
Proceeds (payment) on lines of credit, net				
Proceeds from debt - related parties				
Proceeds from debt				1.58
Payment on debt - related parties				
Payment on debt				
Other	0.16	0.20		0.05
Net cash provided by (used in) financing activities	**$2.48**	**$2.65**	**$3.84**	**$1.63**
Increase (decrease) in cash and equivalents	($0.21)	($0.13)	($0.04)	($0.12)
Cash & equivalents at beginning of period	$0.58	$0.37	$0.24	$0.20
Cash & equivalents at end of period	$0.37	$0.24	$0.20	$0.08

HISTORICAL ZACKS RECOMMENDATIONS



DISCLOSURES

The following disclosures relate to relationships between Zacks Investment Research ("ZIR") and Zacks Small-Cap Research ("Zacks SCR") and the issuers covered by the Zacks SCR analysts in the Small-Cap Universe.

ZIR or Zacks SCR Analysts do not hold or trade securities in the issuers which they cover. Each analyst has full discretion on the rating and price target based on their own due diligence. Analysts are paid in part based on the overall profitability of Zacks SCR. Such profitability is derived from a variety of sources and includes payments received from issuers of securities covered by Zacks SCR for non-investment banking services. No part of analyst compensation was, is or will be, directly or indirectly, related to the specific recommendations or views expressed in any report or blog.

ZIR and Zacks SCR do not make a market in any security nor do they act as dealers in securities. Zacks SCR has never received compensation for investment banking services on the small-cap universe. Zacks SCR does not expect received compensation for investment banking services on the small-cap universe. Zacks SCR has received compensation for non-investment banking services on the small-cap universe, and expects to receive additional compensation for non-investment banking services on the small-cap universe, paid by issuers of securities covered by Zacks SCR. Non-investment banking services include investor relations services and software, financial database analysis, advertising services, brokerage services, advisory services, investment research, and investment management.

Additional information is available upon request. Zacks SCR reports are based on data obtained from sources we believe to be reliable, but is not guaranteed as to accuracy and does not purport to be complete. Because of individual objectives, the report should not be construed as advice designed to meet the particular investment needs of any investor. Any opinions expressed by Zacks SCR Analysts are subject to change. Reports are not to be construed as an offer or the solicitation of an offer to buy or sell the securities herein mentioned. Zacks SCR uses the following rating system for the securities it covers. Buy/Outperform: The analyst expects that the subject company will outperform the broader U.S. equity market over the next one to two quarters. Hold/Neutral: The analyst expects that the company will perform in line with the broader U.S. equity market over the next one to two quarters. Sell/Underperform: The analyst expects the company will underperform the broader U.S. Equity market over the next one to two quarters.

The current distribution of Zacks Ratings is as follows on the 1007 companies covered: Buy/Outperform- 15.2%, Hold/Neutral- 78.3%, Sell/Underperform – 6.2%. Data is as of midnight on the business day immediately prior to this publication.

© Copyright 2013, Zacks Investment Research. All Rights Reserved.